PRINT INSTRUCTIONS: REFERENCE SHEET FOR VS-ODC300-WHT P/N 77-600027-001 REV 1.2 | **INK:** BLACK | **MATERIAL:** 20 LB MEAD BOND | **SIZE:** 8.50" X 11.00" SCALE 1:1 | **FOLDS:** BI-FOLD VERTICAL, BI-FOLD HORIZONTAL (TO FIT IN BOX)

Vivint Outdoor Camera Pro

(VS-ODC300-WHT)

Quick Reference (User Manual — Installation & Operation)

The Vivint Outdoor Camera Pro is a state-of-the-art high-res camera that can be added to the homeowner's integrated Vivint Smart Home system. The outdoor camera provides live and recorded video that can be viewed at the control panel as well as remotely via the apps; microphones and speaker for audio/communication capabilities; and an LED light ring that indicates camera function and status.

Professionally installed by a Vivint technician, the outdoor camera features a reliable hard-wired connection to the Vivint system and the home's network router (for fast, smooth video playback) by using either a Wi-Fi Bridge or PoE/PLC device-link that supplies both power and connectivity.

Other features include: Night vision; 140° FOV (field of view); Pinch-to-zoom video image; Person-triggered app notifications; Speaker for two-way talk via the panel or apps.

This document includes a product description, installation and test instructions, basic functionality / user operation overview, as well as technical specifications and regulatory notices and declarations.

Installation Instructions — For the Wiring and the Camera

Installing the Vivint Outdoor Camera Pro is a multi-step procedure involving different power/connectivity hardware options, but it is straightforward and can be quickly learned and mastered. The Vivint technician should carefully read all of these steps (and tips below) in order to ensure a successful installation and optimal performance. For additional information, including detailed instructions about the Wi-Fi Bridge and PoE/PLC device setup, refer to the *Field Service Smart Home Pros* website. (**NOTE:** The procedures outlined below are comprehensive, meaning they cover all of the wiring and both the Wi-Fi Bridge and PoE/PLC install options. Read them closely in order to fully understand each part.)

To install the wiring and the camera, follow these steps:

1. **Identify the best location to install the camera**, consulting with the homeowner (see "Tips"). Also, locate the nearest indoor outlet where you will run the Ethernet wire and plug in either the Wi-Fi Bridge or PoE/PLC device. IMPORTANT: The Outdoor Camera Pro must be installed between 9 and 11 feet above the ground.
2. **Run Ethernet Cat5e wire from the camera to the outlet**, leaving excess wire at both ends.
3. At the outlet (for a W-Fi Bridge or PoE/PLC device), to terminate the Cat5e wire:
   a) Drill a hole near the outlet, and pull the wire down through the wall.
   b) Terminate the wire with an RJ45 jack according to the T-568B order. To do this, strip 1" of the jacket to expose the 4 wire pairs, use the pull string to remove 2" more and cut away the jacket and string, trim the jacket corners, untwist the wire pairs, line up the wires in the T-568B order (see Figure-1 below), cut the wires to ¾" with a straight cut, and then slide the RJ45 jack down over the 8 wires.
   c) IMPORTANT: Make sure the orientation is correct; push the wires completely under the pins so that they touch the end; the jacket must be pushed under the strain-relief; securely crimp the RJ45 with the 8-pin tool.
4. At the camera mounting location, to terminate that end of the Cat5e wire:
   a) Drill through the wiring hole in the mounting plate, drill a hole in the home's exterior surface, and run the Cat5e wire through the rubber seal on the plate.
   b) Terminate the wire on the inside of the mounting plate. To do this, strip 1" of the jacket to expose the 4 wire pairs, untwist each pair and arrange them over the terminal that corresponds with their color (see Figure-2 below), use the provided punch-down tool to firmly connect each wire to its matching terminal.
   c) IMPORTANT: Do not strip the wires; do not punch at an angle; inspect each terminal to ensure the wire is completely inserted; cut off excess wire; make sure the rubber seal is tight around the wire for waterproofing.
5. **Mount the camera**, first attaching the mounting plate to the exterior surface with four screws (use either #6 1" stainless steel self-drilling screws, or #6 1.25" galvanized deck screws) and anchors. Fill all of the holes with silicone to ensure waterproofing. (Note that you should use a spacer if you're unable to place the mounting plate directly over the wiring hole.)
6. Attach the camera to the mounting plate, using the T5 security screw (9 mm) as a hinge rotating the camera up until it snaps into place (if necessary, remove the T5 screw, attach the camera, and reinsert the screw). NOTE: The pogo pins will establish an electrical connection, supplying power when the Wi-Fi Bridge or PoE/PLC device is plugged in.
7. Adjust the camera to the desired angle, and then hand-tighten the ball-joint ring.
8. **Add the camera to the system**. With the wiring and camera installed, you should now proceed to "Adding the Camera to the System" to finish setting up and using the camera.

Mounting Plate (inside) —

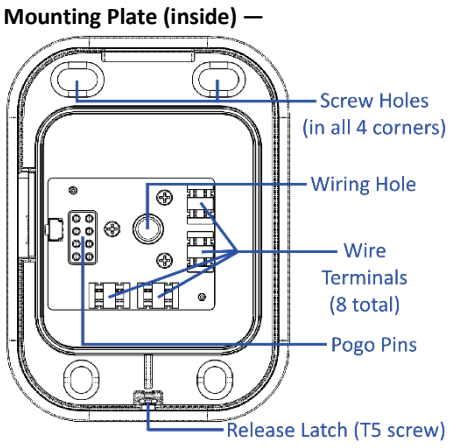

Camera Base (inside) —

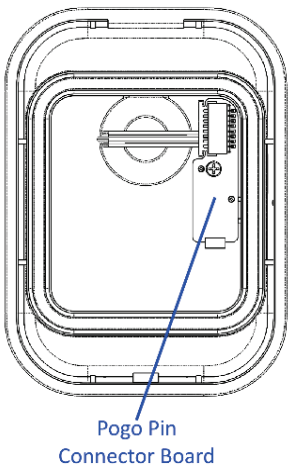

Figure-1: RJ45 Wires in T-568B Order —

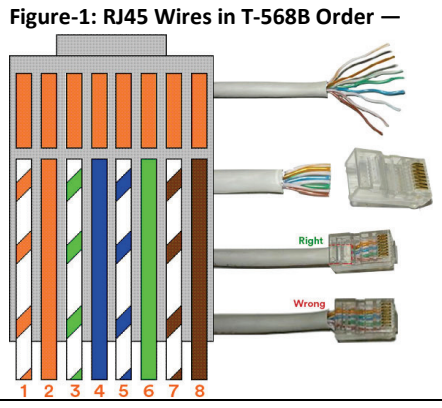

Figure-2: Wire Terminal Colors —

INSTALLATION TIPS / BEST PRACTICES:

- Install within the height restrictions — 9' min. to 11' max.
- Ensure the wire is undamaged and hidden, from the power supply to the camera.
- Pay attention to the mounting surface (i.e., wood, brick, etc.).
- If installing under eaves/soffits, make sure to recess the camera enough to protect it from any precipitation.
- To detach the camera, insert a narrow pointed tool into the release latch opening and gently separate the camera from the mounting plate.

Adding the Camera to the System — via Wi-Fi Bridge or PoE/PLC Device

Now that the Ethernet wiring is prepared (to supply both power and network connectivity to the camera through either a Wi-Fi Bridge or PoE/PLC device), and the camera is installed, you can power up the hardware and add the camera to the Vivint system via the Installer Toolbox at the control panel, by using one of the two methods below.

To add the camera with a Wi-Fi Bridge configuration, follow these steps:

1. If the Vivint control panel is not already up and running, apply 100-240 VAC power to the panel and wait for it to boot up completely.
2. Apply 100-130 VAC 60Hz power to the LG Wi-Fi Bridge by plugging it into the wall outlet. Note that you will add the camera to the system via this bridge.
3. Verify the panel is connected to the local network. To do this, at the panel tap on the menu icon (…) in the bottom right corner of the touchscreen > tap **Software version** > enter the PIN code **2203** to access the Installer Toolbox > tap **Networking** > **Panel connection to the local network** > **Wired** > and then tap **Back** to return to the Networking page and verify the status is "Connected".
4. Tap **Back** again to return to the Installer Toolbox > tap **Smart Home devices** > **Cameras** > and then tap **Add camera**. Note that you will add the camera via the Wi-Fi Bridge, so you first pair the Wi-Fi Bridge to the panel (with the WPS option), and then physically connect the camera to the bridge with the Ethernet Cat5e wire you've already prepared.
5. At the panel, tap **WPS** > and then tap **Add**. When the panel shows "Listening for device" go to the Wi-Fi Bridge and press and hold the **WPS Pro** button for 3-5 seconds. The WLAN LED will begin blinking red. When the WLAN LED blinks green, immediately plug the Ethernet RJ45 jack (from the outdoor camera) into the camera port on the Wi-Fi Bridge. The panel will show that the device is "Found" and will begin its configuration.
6. Tap **Camera details** to monitor configuration progress. Wait until the camera status shows "Online" before finishing the camera setup.
   IMPORTANT: This process should NOT be interrupted and could take several minutes to load firmware and configure settings.
7. Once the camera is successfully connected and online, you can enter a descriptive name to uniquely identify the camera.
8. At the panel Home screen, tap the camera icon in the navigation bar at the bottom of the touchscreen, and then tap the thumbnail view for the camera you just added to verify that you can view live video at the panel screen.

Go to the "Operation Overview / User Functionality" section for a high-level introduction to camera features.

To add the camera with a PoE/PLC configuration, follow these steps:

1. If the Vivint control panel is not already up and running, apply 100-240 VAC power to the panel and wait for it to boot up completely.
2. Apply 100-120 VAC 60Hz power to the Zinwell PoE/PLC devices (PLS-8141 and PLS-8171) by plugging them into the wall outlet. Note that you will add the camera to the system via this device.
3. For PoE/PLC devices it is required to pair all of the devices to create a secure network. Follow these steps if the PoE/PLC devices are not already paired:
   a) Plug the PLS-8141 and PLS-8171 devices into outlets in the same room.
   b) At one of the devices, press the **Security** button on the side for 3 seconds to initiate the pairing process. The power LED will start blinking green.
   c) At the other device, press the **Security** button on the side for 3 seconds to include this device in the group. The power LED will start blinking green.
   d) Do the same process for each PoE/PLC device you will be using. All of the devices must be paired to the same group.
4. Verify the panel is connected to the local network. To do this, at the panel tap on the menu icon (…) in the bottom right corner of the touchscreen > tap **Software version** > enter the PIN code **2203** to access the Installer Toolbox > tap **Networking** > **Panel connection to the local network** > **Wired** > and then tap **Back** to return to the Networking page and verify the status is "Connected".
5. Tap **Back** again to return to the Installer Toolbox > tap **Smart Home devices** > **Cameras** > and then tap **Add camera**. Note that you will add the camera via the PoE/PLC devices, so you first physically connect the camera to the PoE/PLC device with the Ethernet Cat5e wire you've already prepared, and then pair that device to the panel (with the Ethernet option).
6. Plug the RJ45 jack (from the outdoor camera) into the PLS-8171 adapter.
7. At the panel, tap **Ethernet** > and then tap **Add**. When the panel shows the IP address of the outdoor camera you've installed, tap it to begin configuration.
8. Tap **Camera details** to monitor configuration progress. Wait until the camera status shows "Online" before finishing the camera setup.
   IMPORTANT: This process should NOT be interrupted and could take several minutes to load firmware and configure settings.
9. Once the camera is successfully connected and online, you can enter a descriptive name to uniquely identify the camera.
10. At the panel Home screen, tap the camera icon in the navigation bar at the bottom of the touchscreen, and then tap the thumbnail view for the camera you just added to verify that you can view live video at the panel screen.

Troubleshooting Tips

Possible failures and what to do in order to resolve:

- **Camera is offline –**
  - ✓ Reset the Wi-Fi Bridge (or PoE device)
  - ✓ Factory reset the Wi-Fi Bridge (or PoE device)
  - ✓ Power cycle the ODC
  - ✓ Factory reset the ODC

Operation Overview / User Functionality

Once the outdoor camera is up and running, the user can perform the following functions at the panel and via the web and mobile apps. For detailed instructions, refer the customer to the online Help resources (articles and video tutorials) at the Vivint Support Site.

- View a live video feed
- View recorded video clips (enable recording options)
- Receive person-triggered (event) notifications
- Enable Smart Sentry detection (with light ring and selected tone)
- Engage in two-way talk with someone at the camera
- Enable privacy mode
- Check signal strength

Additionally, for camera management and configuration, at the panel **Devices > Cameras** settings page, the user can:

- Adjust detection settings
- Adjust video settings
- Rename the camera
- Reboot the camera
- Delete the camera

Outdoor Camera Pro (assembled) —

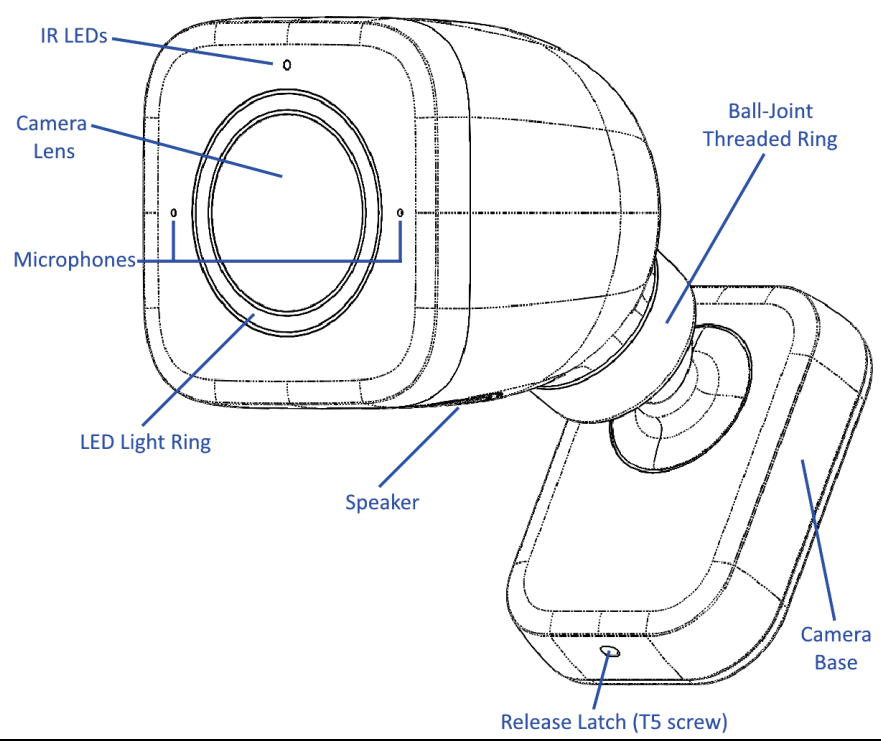

Technical / Hardware Specifications

Vivint Part Number (P/N)	VS-ODC300-WHT
Model Number (M/N)	CM03
Camera Type	Outdoor (plastic housing)
Color	White
Weight	7.0 oz. (includes camera and mounting plate)
Dimensions	150 x 71 x 95 mm (5.8 x 2.8 x 3.7 inches)
Power Usage	44 V min. – 57 V max.
Power Input	PoE (Power over Ethernet) power supply (specification: 802.3af and 802.3at ,Type 1, Class 0)
Backup Battery	None
Connectivity	PoE (Power over Ethernet) network connection
Video Codec	H.264, H.265
Camera Lens	1/2", 8-megapixel sensor
Video Max Resolution	1080p video streaming; 4K UHD image on zoom
FPS (frames per second)	Up to 24 fps
FOV (field of view)	140° diagonal (vertical and horizontal)
Night Vision	55 feet (max distance)
Audio	Built-in microphones and speaker
Audio Codec	Supported audio codecs: G.711, Opus
Environmental Temperature	-4°F to 113°F (-20°C to 45°C)
Weatherproofing	IP65, with UV protection

FCC and ISED Canada Regulatory Declarations*

CAUTION! Unauthorized changes or modifications could void the user's authority to operate the equipment.

This device has been tested and found to comply with the limits for a Class B digital device, pursuant to Part 15 of FCC Rules and Industry Canada license-exempt RSS standard(s). Operation is subject to the following two conditions:

(1) This device may not cause harmful interference, and
(2) This device must accept any interference received, including interference that may cause undesired operation of the device.

These limits are designed to provide reasonable protection against harmful interference in a residential installation. This equipment generates, uses, and can radiate radio frequency energy and, if not installed and used in accordance with the instructions, may cause harmful interference to radio communications. However, there is no guarantee that interference will not occur in a particular installation. If this equipment does cause harmful interference to radio or television reception, which can be determined by turning the equipment off and on, the user is encouraged to try to correct the interference by one or more of the following measures:

- Reorient or relocate the receiving antenna.
- Increase the separation between the equipment and the receiver.
- Connect the equipment into an outlet on a circuit different from that to which the receiver is connected.
- Consult the dealer or an experienced radio/television technician for help.

PRUDENCE! Changements ou modifications pourraient annuler le droit de l'utilisateur à utiliser l'équipement non autorisées.

Conformément à la réglementation d'Industrie Canada, le présent émetteur radio peut fonctionner avec une antenne d'un type et d'un gain maximal (ou inférieur) approuvé pour l'émetteur par Industrie Canada. Dans le but de réduire les risques de brouillage radioélectrique à l'intention des autres utilisateurs, il faut choisir le type d'antenne et son gain de sorte que la puissance isotrope rayonnée équivalente (p.i.r.e.) ne dépasse pas l'intensité nécessaire à l'établissement d'une communication satisfaisante.
Le présent appareil est conforme aux CNR d'Industrie Canada applicables aux appareils radio exempts de licence. L'exploitation est autorisée aux deux conditions suivantes:

(1) l'appareil ne doit pas produire de brouillage, et
(2) l'utilisateur de l'appareil doit accepter tout brouillage radioélectrique subi, même si le brouillage est susceptible d'en compromettre le fonctionnement.

Ces limites sont conçues pour fournir une protection raisonnable contre les interférences nuisibles dans une installation résidentielle. Cet équipement génère, utilise et peut émettre une énergie de radiofréquence et, s'il n'est pas installé et utilisé conformément aux instructions, il peut causer des interférences nuisibles aux communications radio. Cependant, il n'existe aucune garantie que des interférences no se produiront pas dans une installation particulière. Si cet équipement provoque des interférences nuisibles à la réception radio ou télévision, ce qui peut être déterminé en mettant l'équipement hors et sous tension, l'utilisateur est encouragé à essayer de corriger l'interférence par une ou plusieurs des mesures suivantes:

- Réorienter ou déplacer l'antenne de réception.
- Augmentez la distance entre l'équipement et le récepteur.
- Connecter l'équipement à une sortie sur un circuit différent de celui sur lequel le récepteur est branché.
- Consulter le revendeur ou un technicien radio / télévision expérimenté pour de l'aide.

*For complete regulatory compliance information, go to: vivint.com/fcc